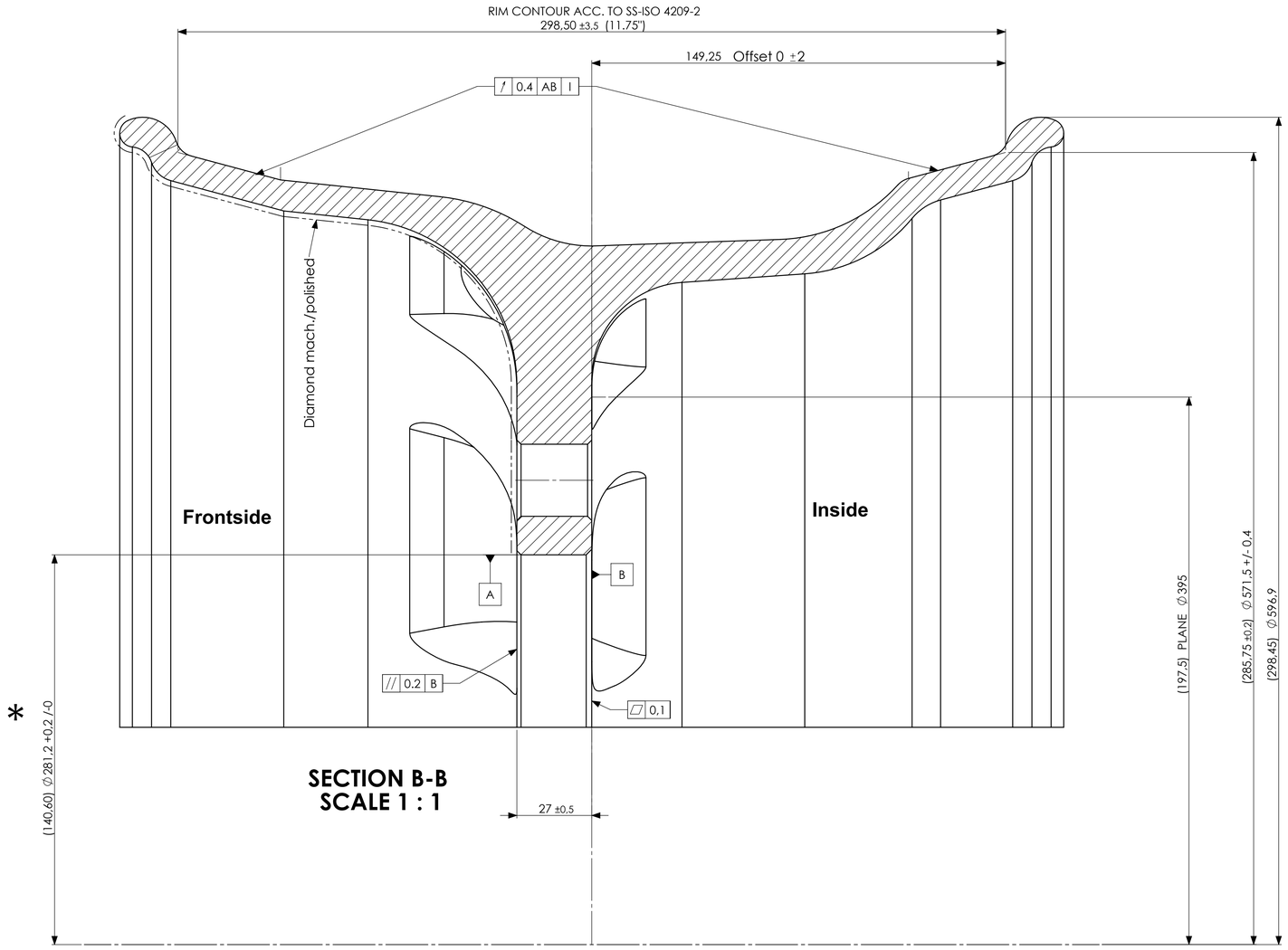

SECTION B-B
SCALE 1 : 1

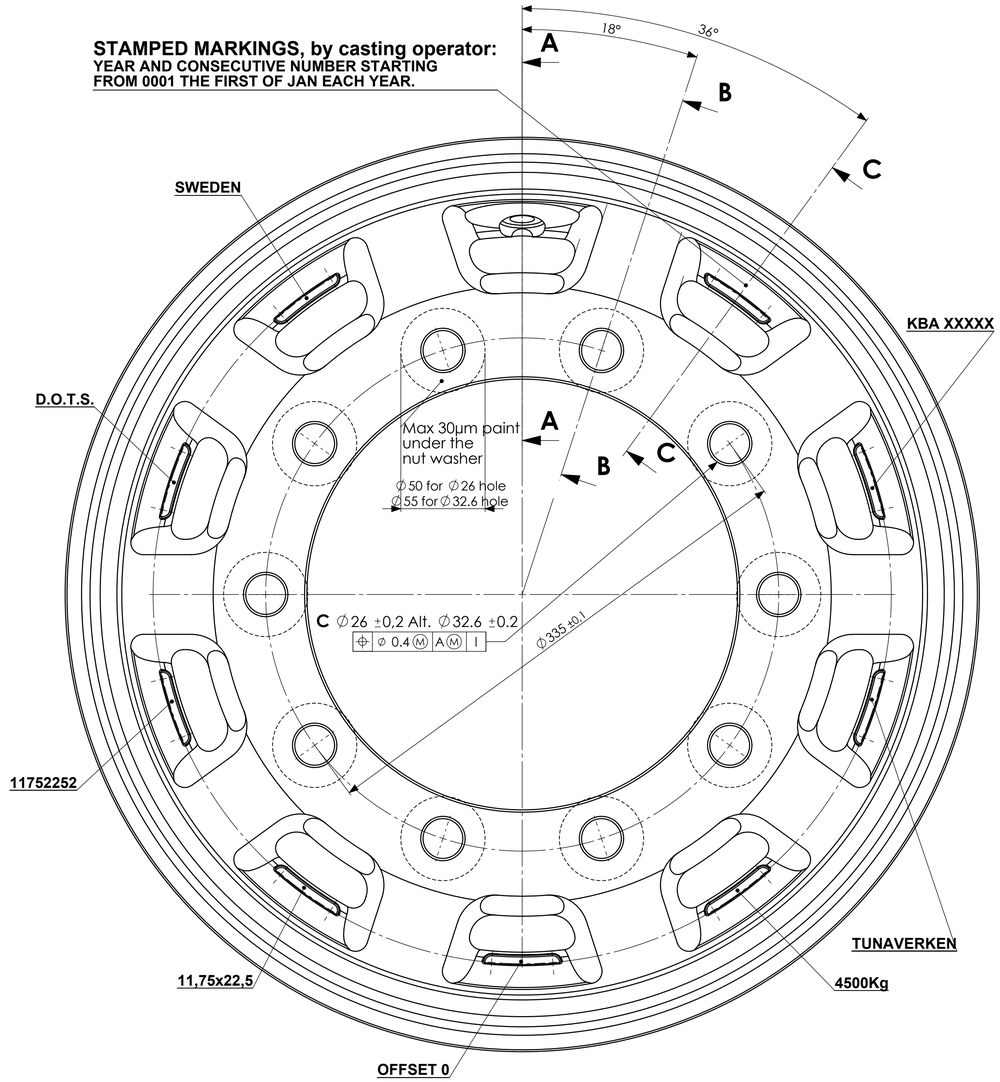

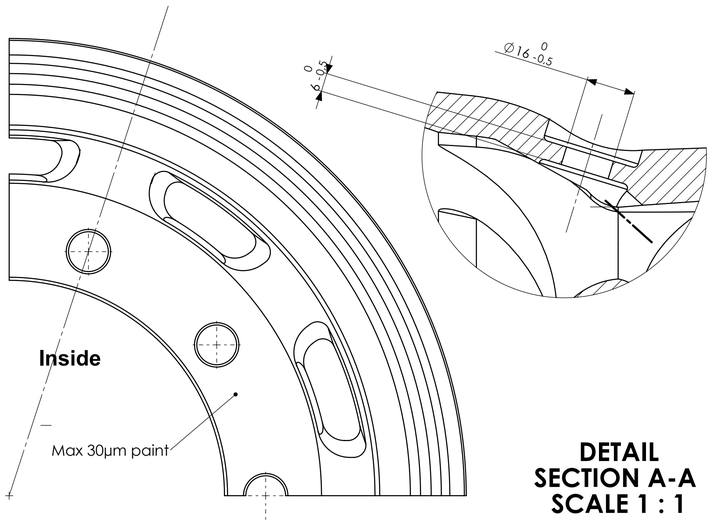

DETAIL
SECTION A-A
SCALE 1 : 1

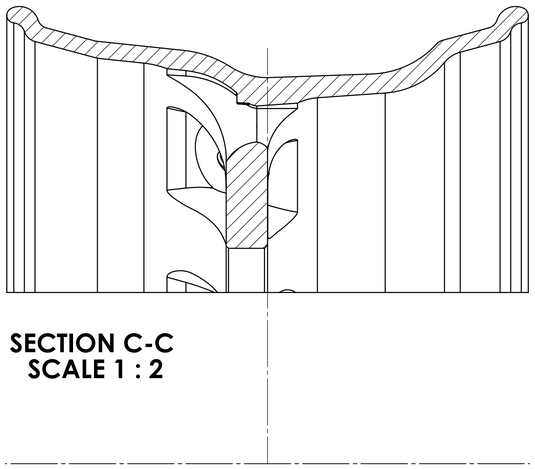

SECTION C-C
SCALE 1 : 2

Part number	Surface	C ∅
117522575A	Diamond no clear coat	26
117522576A	Polished no clear coat	26

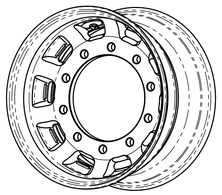

FRONT SIDE

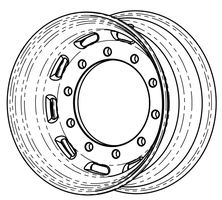

INSIDE

REMOVE BURRS
BRAKE SHARP EDGES
HARDNESS 95-110 HB
ISO 2768-C

PROPRIETARY AND CONFIDENTIAL

THE INFORMATION CONTAINED IN THIS DRAWING IS THE SOLE PROPERTY OF THE OWNER. ANY REPRODUCTION IN PART OR AS A WHOLE WITHOUT THE WRITTEN PERMISSION FROM THE OWNER IS PROHIBITED.

		Material, Weight. SS2245-07 Weight: 27kg	KBA No / Reference
Designed by J.P.	Checked by		Date 070118
Owner TUNAVERKEN SWEDEN AB		Title/Name Cast Wheel 11,75" x 22,5" OFFSET 0 REVERSIBLE CLASSIC	
		Drawing number 11752257-C	Issue 02 / A1